Standard NEPTUNE IP68

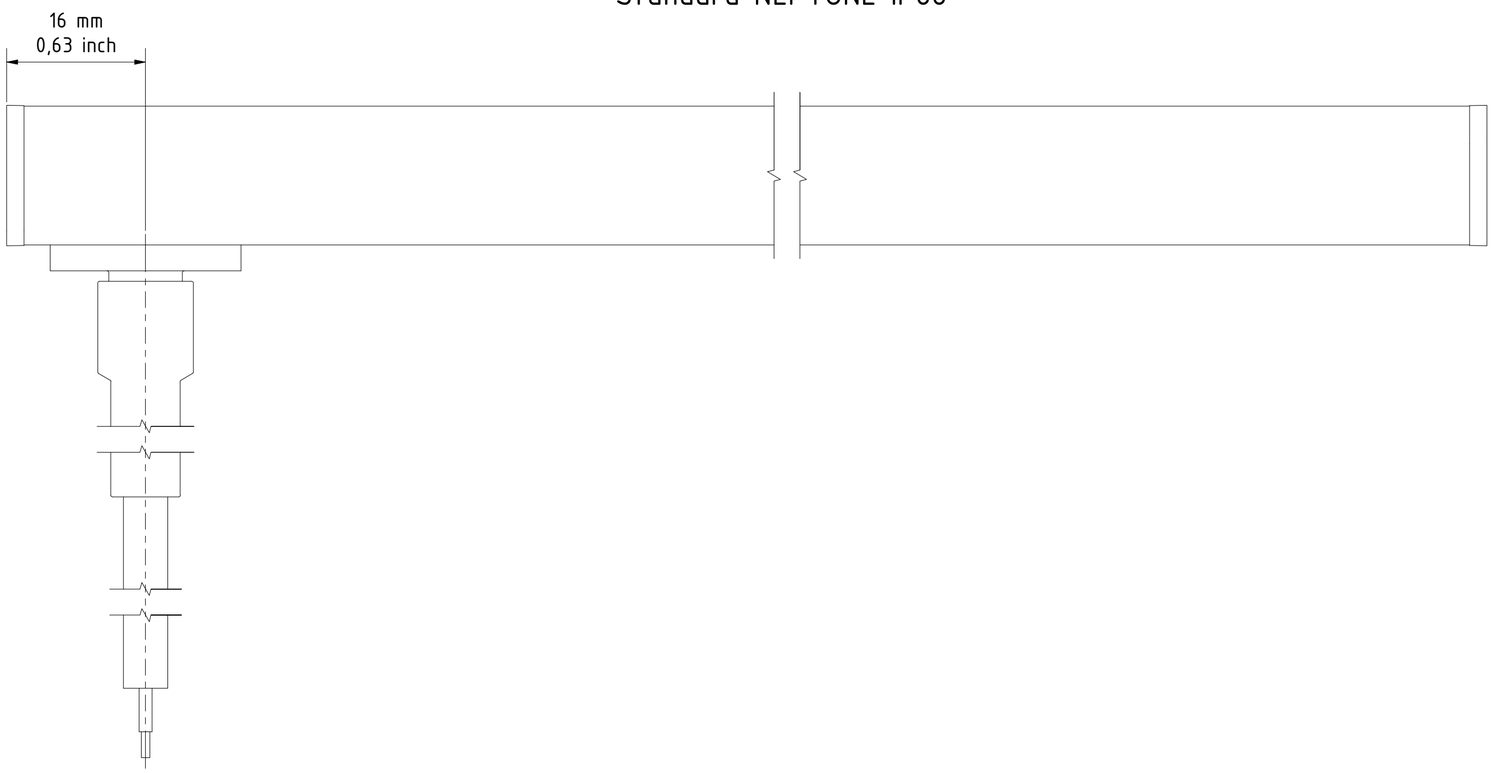

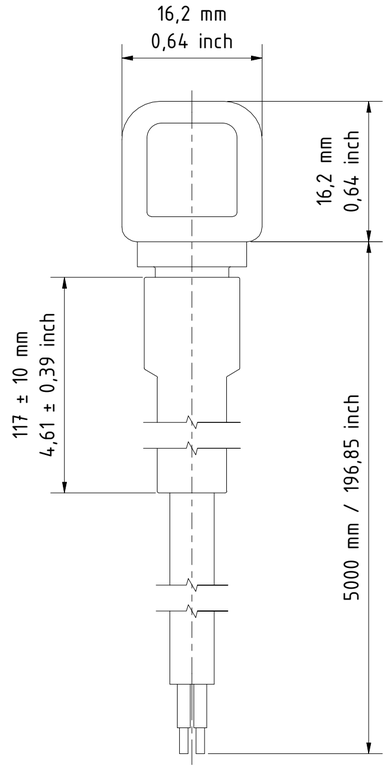

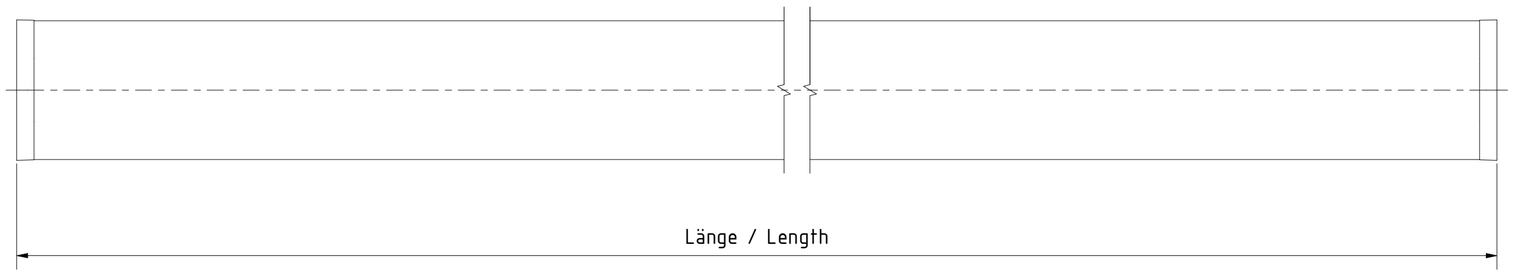

Connection Cable:

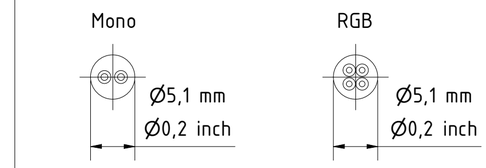

Toleranzen und Längen / Tolerances and Lenghts:

Toleranz / Tolerance: ± 1 mm / 0.04 inch

Lmin Mono: 555 mm; Lmax: 5055 mm; in 62,5 mm increments
Lmin RGB: 555 mm; Lmax: 4055 mm; in 62,5 mm increments

Lmin Mono: 21,85 inch; Lmax: 199,02 inch; in 2,46 inch increments
Lmin RGB: 21,85 inch; Lmax: 159,65 inch; in 2,46 inch increments

LED LINEAR™
A Fagerhult Group Company

Material edges according to DIN ISO 13715

Index	Revision	Date	Name
		Drawn	26.10.2023 Zeyen
		Controlled	26.10.2023 Weßels
		Approved	

Refer to protection notice ISO 16016

General tolerances DIN ISO 2768-1-m DIN ISO 2768-2-K

Material:

Art.-No.:

Title:
NEPTUNE IP68

Drawing number:
VT 365.0031

Surface details acc. to DIN ISO 1302 in Ra/Rank 2

Scale 2 : 1

Sheet 1/2

A2

Standard NEPTUNE IP68
mit / with VarioClip TV 30mm 316L / 13000050-01

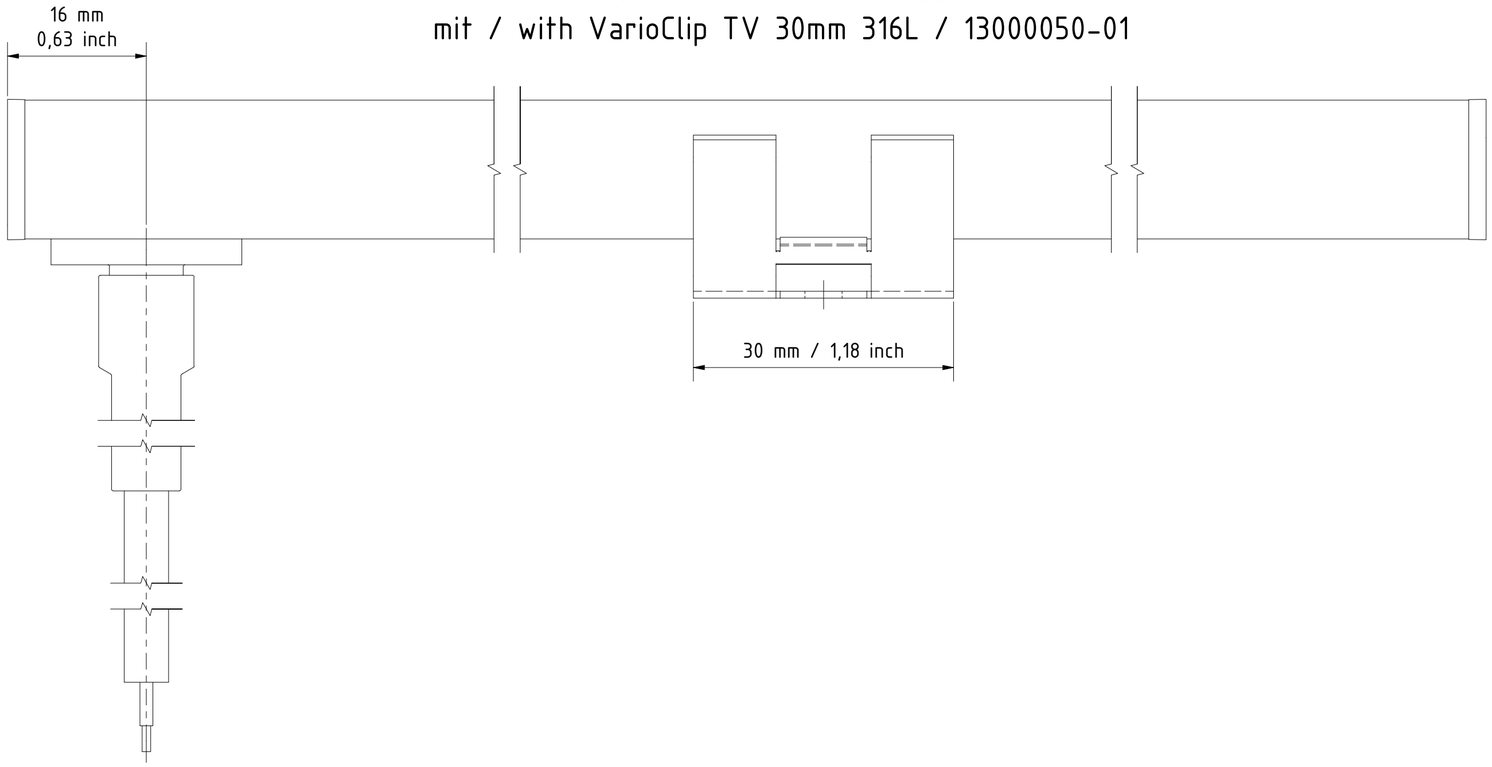

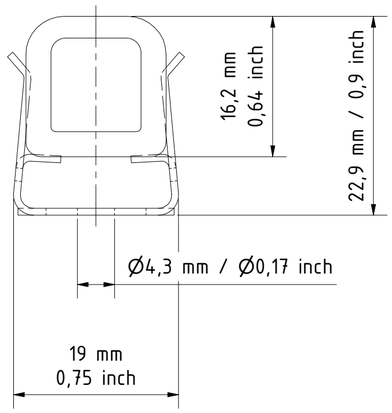

Werkstoffe und Farb-Varianten / Material and Color options:

Art.-#: 13000050-01
- 1.4404 / V4a / Edelstahl / Stainless steel

LED LINEAR™
A Fagerhult Group Company

Material edges according to DIN ISO 13715

	Date	Name
Drawn	26.10.2023	Zeyen
Controlled	26.10.2023	Weßels
Approved		

Refer to protection notice ISO 16016

Index	Revision	Date	Name

General tolerances DIN ISO 2768-1-m DIN ISO 2768-2-K

Material:

Art.-No.:

Title:
NEPTUNE IP68

Drawing number:
VT 365.0031

Surface details acc. to DIN ISO 1302 in Ra/Rank 2

Scale 2 : 1

Sheet 2/2

A2